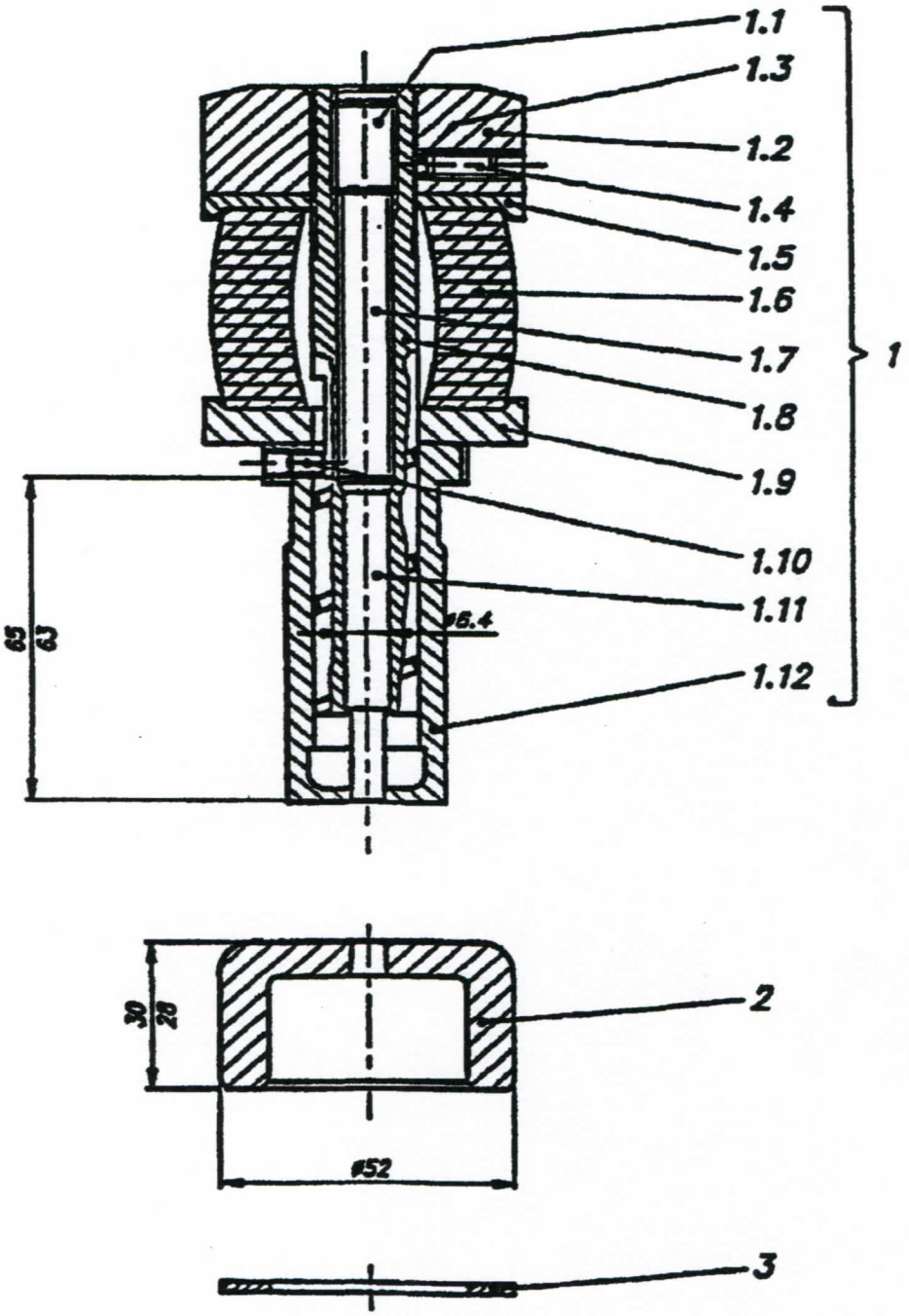

6 M

Pos.	Désignation	N° Article	Nbre	Poids
1	ENSEMBLE POINCON 6M ROND >3.00 mm	**006.304.900**	1	1.040
	ENSEMBLE POINCON 6M ROND <3.00 mm	**006.304.910**	1	1.040
1.1	VIS POUR 6M	**817.074.1**	1	0.010
1.2	TETE 20 OPM	**896.020.9**	1	0.310
1.3	LARDON OPM	**326.018.0**	1	0.010
1.4	VIS S.TETE 6 P.INT.PLAT 5 x 12	**817.022.1**	1	0.010
1.5	ASSIETTE	**332.013.0**	1	0.070
1.6	RESSORT POLYURETHANE	**206.045.0**	1	0.090
1.7	GOUPILLE	**895.034.9**	1	0.020
1.8	PORTE-POINCON 6 OPM	**326.021.0**	1	0.240
1.9	ASSIETTE INF. OUTIL 20	**332.012.0**	1	0.140
1.10	VIS SANS TETE A TETON	**820.018.1**	1	0.010
1.11	POINCON 6 MC ROND	**105.304.900**	1	0.010
	POINCON 6 MC ROND 2-3 mm	**105.304.910**	1	0.010
1.12	FOURREAU 20M ROND	**102.304.900**	1	0.170
2	MATRICE RONDE < 10 mm	**100.348.900**	1	0.290
3	RONDELLE D'AFFUTAGE MATRICE 35	**893.060.9**	1	0.010