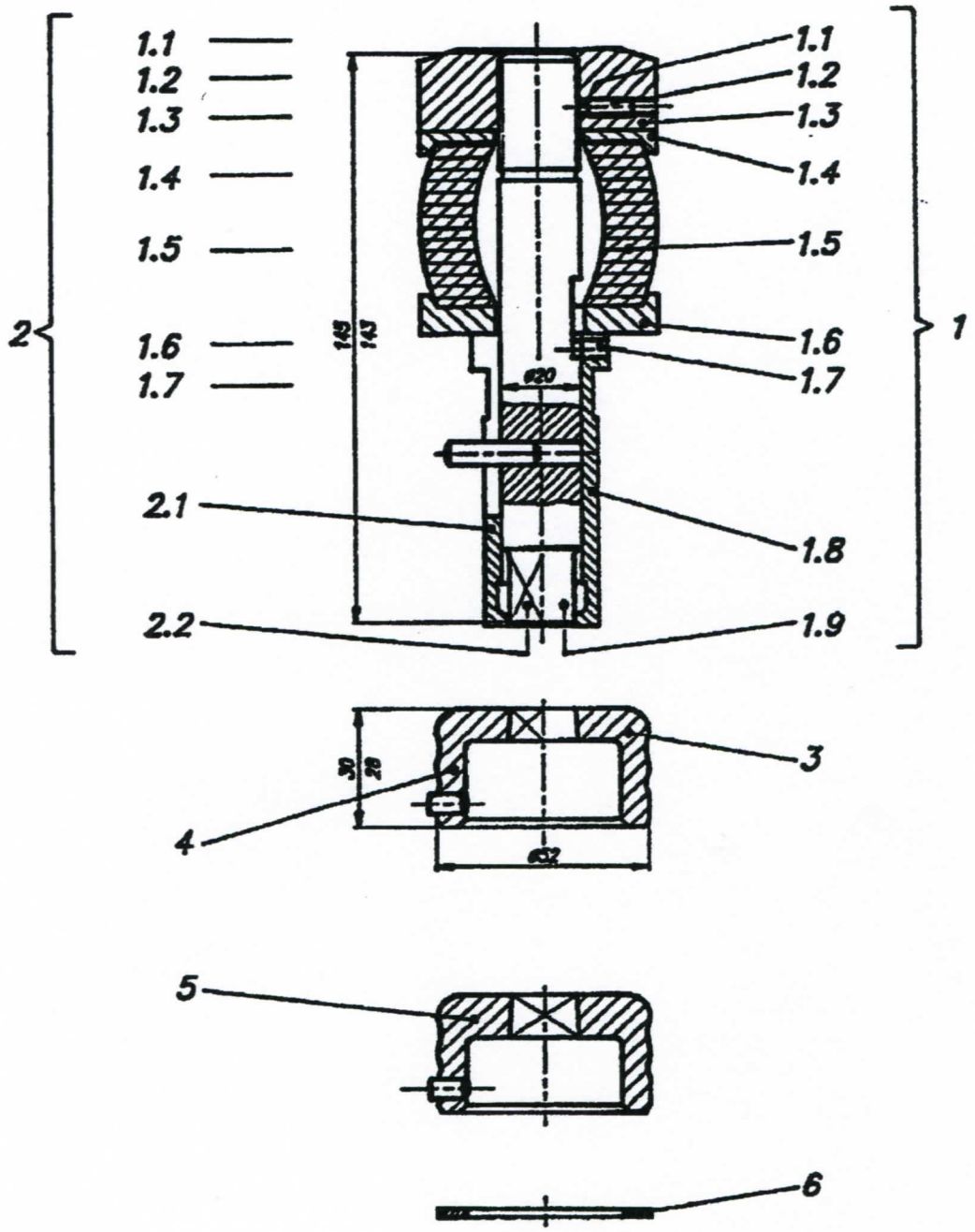

20 M

Pos.	Désignation	N° Article	Nbre	Poids
1	ENSEMBLE POINCON 20M ROND >7.00 mm	**006.306.900**	1	1.080
	ENSEMBLE POINCON 20M ROND 4 - 7.00 mm	**006.306.910**	1	1.080
1.1	LARDON OPM	**326.018.0**	1	0.010
1.2	VIS S.TETE 6 P.INT.PLAT 5 x 12	**817.022.1**	1	0.010
1.3	TETE 20 OPM	**896.020.9**	1	0.300
1.4	ASSIETTE	**332.013.0**	1	0.070
1.5	RESSORT POLYURETHANE	**206.045.0**	1	0.010
1.6	ASSIETTE INF. OUTIL 20	**332.012.0**	1	0.140
1.7	VIS SANS TETE A TETON	**820.018.1**	1	0.010
1.8	FOURREAU 20M ROND	**102.304.900**	1	0.170
1.9	POINCON 20M ROND	**105.306.900**	1	0.320
1.9.a	POINCON 20M ROND 4 - 7 mm	**105.306.910**	1	0.320
2	ENS. POINCON 20M FORME	**006.307.9xx**	1	0.090
2c	ENS. POINCON 20M FORME 2 - 4 mm	**006.307.911**	1	0.090
2.1	FOURREAU 20M FORME	**102.307.9xx**	1	0.160
2.1.c	FOURREAU 20M FORME croquis	**102.307.911**	1	0.160
2.2	POINCON 20M FORME	**105.307.9xx**	1	0.330
2.2.c	POINCON 20M FORME 2 - 4 mm	**105.307.911**	1	0.330
3	MATRICE RONDE < 10 mm	**100.348.900**	1	0.290
3.a	MATRICE RONDE	**100.350.900**	1	0.290
4	MATRICE 35 MC FORME	**100.351.9xx**	1	0.290
4.c	MATRICE 35 MC FORME croquis	**100.351.911**	1	0.290
5	MATRICE 35 MC FORME renforcée	**100.357.9xx**	1	0.330
5.c	MATRICE 35 MC FORME renforcée croquis	**100.357.911**	1	0.330
6	RONDELLE D'AFFUTAGE MATRICE 35	**893.060.9**	1	0.010